Kav





Kav

Lounge

Indoor



Kav

Kav is one of B&T Design’s early and iconic lounge designs. With its generous circular seat and sculptural presence, it brings a quiet boldness to any setting while maintaining a sense of warmth and simplicity.

Upholstery options include artificial leather, natural leather, or any fabric from the B&T Design collection. The solid wood base is available in a selection of finishes as presented in the B&T Design solid wood catalogue.



Designer

Alp Nuhoğlu - 2008



Kav

Lounge

Indoor

Product Details



Its curved seat rests on a central wooden column and features a swivel base, allowing for ease of movement in lounge settings. The back cushion is removable, offering flexibility in use and maintenance.



The internal structure combines block foams of varying density with integrated rubber elements, providing balanced support and lasting comfort.

Finish Options

A rich range of material choices is provided for Kav series to create the best match within interior style.

Ashwood Finishes

White
RAL 110-1
(Ash)


Silk Grey
RAL 7044
(Ash)


Taupe
G 876
(Ash)


Grey
G 458
(Ash)


Anthracite
RAL 7016
(Ash)


Black
RAL 9005
(Ash)


Cement Grey
RAL 7033
(Ash)


Green Grey
RAL 7009
(Ash)


Precious
Sand
(Ash)


Light Mocha
(Ash)


Dark Mocha
(Ash)


Natural
(Ash)


Metalic
Earth
(Ash)


Beige Red
RAL 3012
(Ash)


Terracotta
RAL 8004
(Ash)


Tomato Red
RAL 3013
(Ash)


Black Red
RAL 3007
(Ash)


Pastel Violet
RAL 4009
(Ash)


Nordic
Lichen
(Ash)


Steel Blue
RAL 5001
(Ash)

Upholstery

Fabric, Leather, Artifical Leather.
COM and COL options are also available

textile fabric (mt)	2,5
real leather (m²)	5

More options are downloable in the catalogues

MATERIAL CATALOGUE

FABRIC & LEATHER CATALOGUE



Kav

Lounge

Indoor

Dimensions (cm)

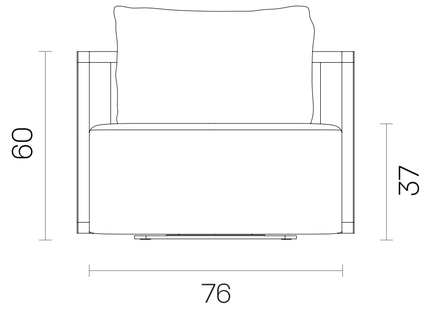

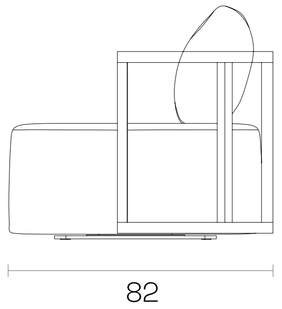

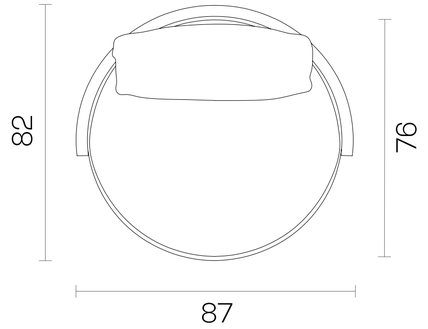

Downloads

2D & 3D FILES

PRODUCT IMAGES

CERTIFICATES

You can run this product with following system:

pCon PLANNER



Kav

Lounge

Indoor

Technical Specifications | Lounge

Package Dimensions (cm)	90x89x72 quantity in box: 1
Volume (m^3)	0,57
Weight (kg)	14
Structure	Solid Ashwood

CARE AND MAINTENANCE

Care and maintenance instructions &
warranty certificate **click and download**





www.bt.design

Showroom

Istanbul
istanbul@bt.design

Ankara
ankara@bt.design

London
london@bt.design

Factory

Istanbul
fabrika@bt.design

Bulgaria
europe@bt.design

Export

export@bt.design